homestyle
the No.1 sink and tap solution

Technical Specification

EN50

Quadrus Undermount 1.5 Bowl

Features

Lifetime Warranty

CE Approved

555mm x 460mm overall size, 200mm deep bowl

Internal 335mm x 400mm (main bowl) 155mm x 400 (half bowl)

80% Quartz content with ULTRA CLEAN anti-bacterial formula

Supplied complete with waste, hygienic overflow and fitting clips

Minimum cabinet width required 600mm

Waste Kit Code:

UKH040

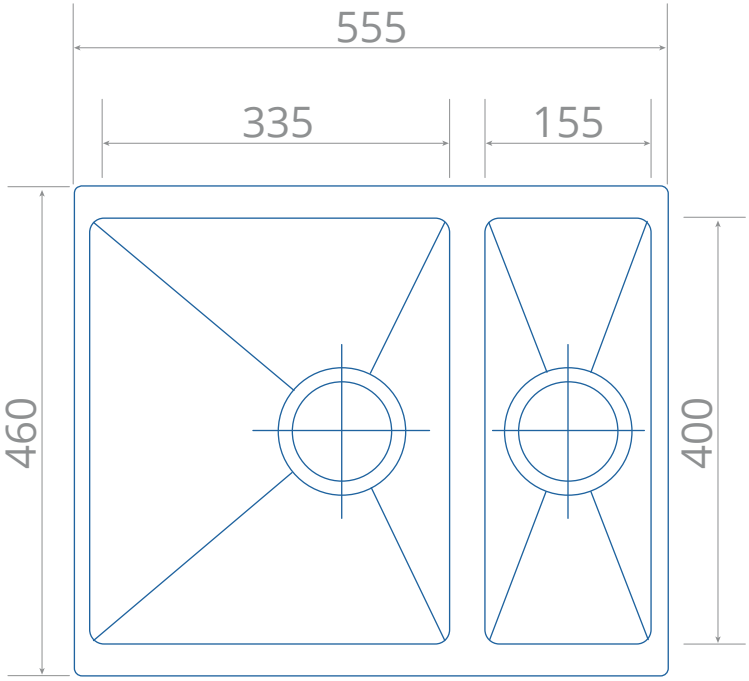

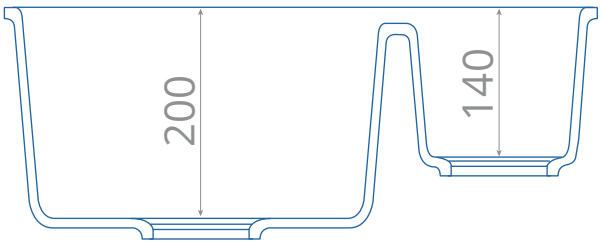

Homestyle Products Ltd,
Crossley Stud Farm, Buxton Road,
Congleton, Cheshire, CW12 2PN
01260 223163
www.ukhomestyle.com

All dimensions are subject to change without notice. Please check the actual product for exact measurements.
No liability will be accepted for incorrect or out of date measurements.

A member of the Acrysil Group of Companies